

NORMAL POWER SOURCE Safety Label - 3" x 1" White on Blue

SKU: TB-RCT-30X10-WB2-H-F7631D
Category: Rectangle Labels
Color: White On Blue

ENGRAVED TEXT

Line 1: "NORMAL POWER SOURCE"

SPECIFICATIONS

Width	76.2mm (3.00")
Height	25.4mm (1.00")
Material	2-Ply Engraved Modified Acrylic
Engraving Depth	0.003" (0.076mm) - Depth may vary
Surface Finish	Matte
Thickness	0.0625" (1.6mm)
Cutting Method	Precision Cut

TOLERANCES

Length: +/-0.12" | Width: +/-0.12" | Thickness: +/-5%

DURABILITY & ENVIRONMENT

- UV Tested: 3+ years without significant color change (ISO 4892-3)
- Suitable for outdoor use
- Temperature Range: -40F to 200F

SAFETY RATINGS

NFPA 704	HMIS
Health: 0 (Minimal)	Health: 0 (Minimal)
Flammability: 1 (Slight)	Flammability: 1 (Slight)
Reactivity: 0 (Minimal)	Physical Hazard: 0 (Minimal)

Transport: Not classified as dangerous goods

Product: NORMAL POWER SOURCE Safety Label - 3" x 1" White on Blue

SKU: TB-RC

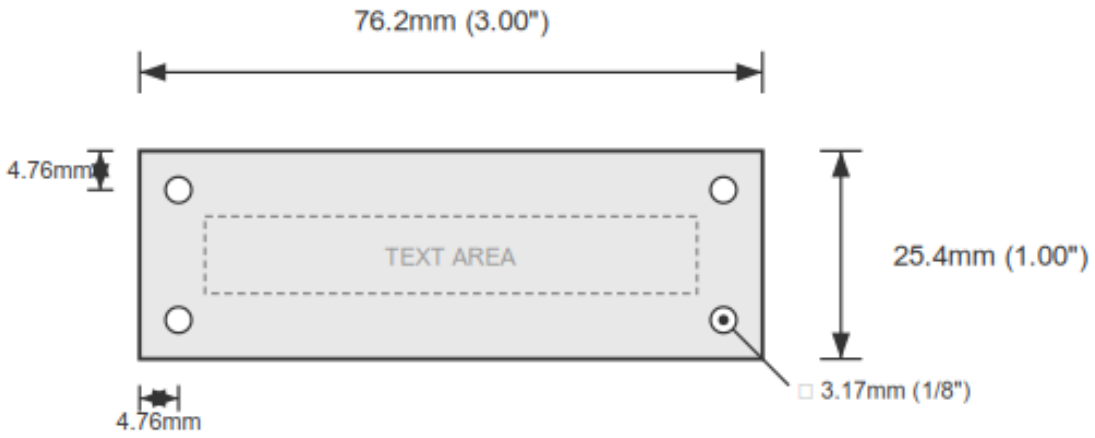

DIMENSIONS

Width	76.2mm (3.00")
Height	25.4mm (1.00")
Text Size	5.0mm (0.20")
Color	White On Blue
Corner Style	Square
Holes	Yes (4x corners)
Hole Diameter	3.18mm (1/8")
Hole Quantity	4
Hole Clearance	3.18mm (1/8") from each edge
Mounting	Screw through hole

NOTES

1. All dimensions in millimeters unless otherwise noted
2. Drawing not to scale
3. See page 1 for manufacturing tolerances
4. Custom sizes available upon request

CARE, CLEANING & SHELF LIFE

- Cleaning: any household detergent with a soft cloth. Use ammonia- or alcohol-based cleaners sparingly with light pressure to avoid micro-scratches. No abrasives, rubbing compounds or scouring pads.
- Storage: flat, in a dry indoor area at steady room temperature, out of direct sunlight.
- Shelf life: the engraved plastic does not expire in storage. UV and outdoor ratings assume the top layer is not scratched through.