


## SAFETY RESET Push Button Legend Plate - 30mm White on Black (Schneider Electric) - White On Blue Bold

SKU: TB-R30-SAFETY-RESET-STA-WHI-BOLD-WBL
Category: Ring Tags
Color: White On Blue
Device Size: 30mm

### ENGRAVED TEXT

Line 1: "SAFETY RESET"

### SPECIFICATIONS

| | |
|---|---|
| Device Size | 30mm |
| Tag Dimensions | 38.8 x 56.2 mm |
| Hole Diameter | 30mm |
| Material | 2-Ply Engraved Modified Acrylic |
| Engraving Depth | 0.003" (0.076mm) - Depth may vary |
| Surface Finish | Matte |
| Thickness | 0.0625" (1.6mm) |
| Cutting Method | Precision Cut |

### TOLERANCES

Length: +/-0.12" | Width: +/-0.12" | Thickness: +/-5%

### DURABILITY & ENVIRONMENT

- UV Tested: 3+ years without significant color change (ISO 4892-3)
- Suitable for outdoor use
- Temperature Range: -40F to 200F

### SAFETY RATINGS

| NFPA 704 | HMIS |
|---|---|
| Health: 0 (Minimal) | Health: 0 (Minimal) |
| Flammability: 1 (Slight) | Flammability: 1 (Slight) |
| Reactivity: 0 (Minimal) | Physical Hazard: 0 (Minimal) |

*Transport: Not classified as dangerous goods*

**Product: SAFETY RESET Push Button Legend Plate - 30mm White on Black (Schneider Electric) - White On Blue Bold**

SKU: TB-R3

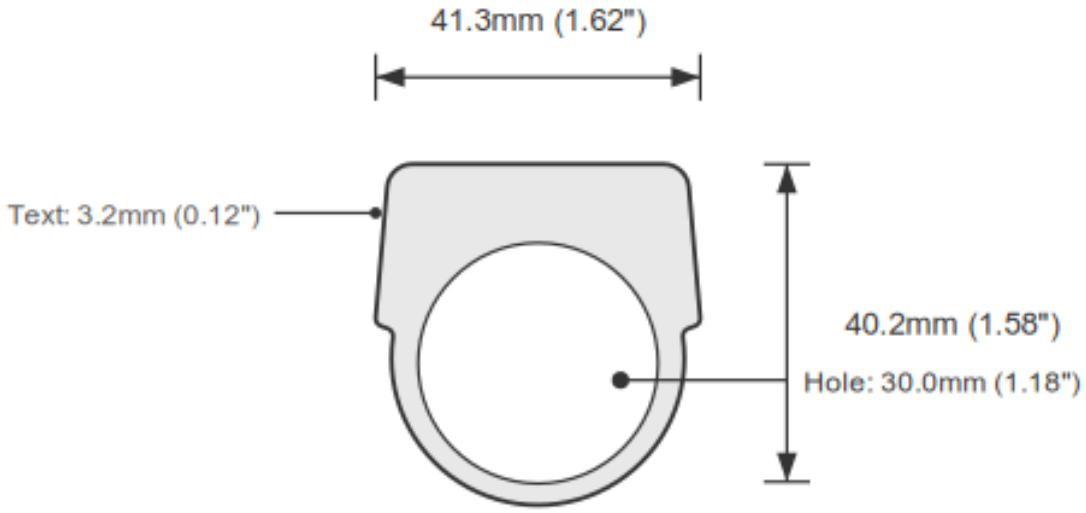


## DIMENSIONS

| | |
|---|---|
| Overall Width | 38.8mm (1.53") |
| Overall Height | 56.2mm (2.21") |
| Hole Diameter | 30.0mm (1.18") |
| Text Size | 3.2mm (0.12") |

## NOTES

1. All dimensions in millimeters unless otherwise noted
2. Drawing not to scale
3. See page 1 for manufacturing tolerances
4. Custom sizes available upon request

## CARE, CLEANING & SHELF LIFE

- Cleaning: any household detergent with a soft cloth. Use ammonia- or alcohol-based cleaners sparingly with light pressure to avoid micro-scratches. No abrasives, rubbing compounds or scouring pads.
- Storage: flat, in a dry indoor area at steady room temperature, out of direct sunlight.
- Shelf life: the engraved plastic does not expire in storage. UV and outdoor ratings assume the top layer is not scratched through.
- Adhesive backing: apply within 24 months of manufacture for full bond strength. Apply to a clean, dry, oil-free surface, ideally at 70F or warmer (not below 50F), and press firmly. Bond reaches full strength in about 72 hours.