

SAFETY RESET Push Button Legend Plate - 30mm Black on White (Schneider Electric) - White On Blue Bold - Blue On White Bold - White On Blue Bold

SKU: TB-R30-SAFETY-RESET-STA-BLA-BOLD-WBL-BOLD-WB-BOLD-WBL
Category: Ring Tags
Color: White On Blue
Device Size: 30mm

ENGRAVED TEXT

Line 1: "SAFETY RESET"

SPECIFICATIONS

Device Size	30mm
Tag Dimensions	38.8 x 56.2 mm
Hole Diameter	30mm
Material	2-Ply Engraved Modified Acrylic
Engraving Depth	0.003" (0.076mm) - Depth may vary
Surface Finish	Matte
Thickness	0.0625" (1.6mm)
Cutting Method	Precision Cut

TOLERANCES

Length: +/-0.12" | Width: +/-0.12" | Thickness: +/-5%

DURABILITY & ENVIRONMENT

- UV Tested: 3+ years without significant color change (ISO 4892-3)
- Suitable for outdoor use
- Temperature Range: -40F to 200F

SAFETY RATINGS

NFPA 704	HMIS
Health: 0 (Minimal)	Health: 0 (Minimal)
Flammability: 1 (Slight)	Flammability: 1 (Slight)
Reactivity: 0 (Minimal)	Physical Hazard: 0 (Minimal)

Transport: Not classified as dangerous goods

Product: SAFETY RESET Push Button Legend Plate - 30mm Black on White (Schneider Electric) - White On Blue Bold - Blue On White Bold - White On Blue Bold

SKU: TB-R3

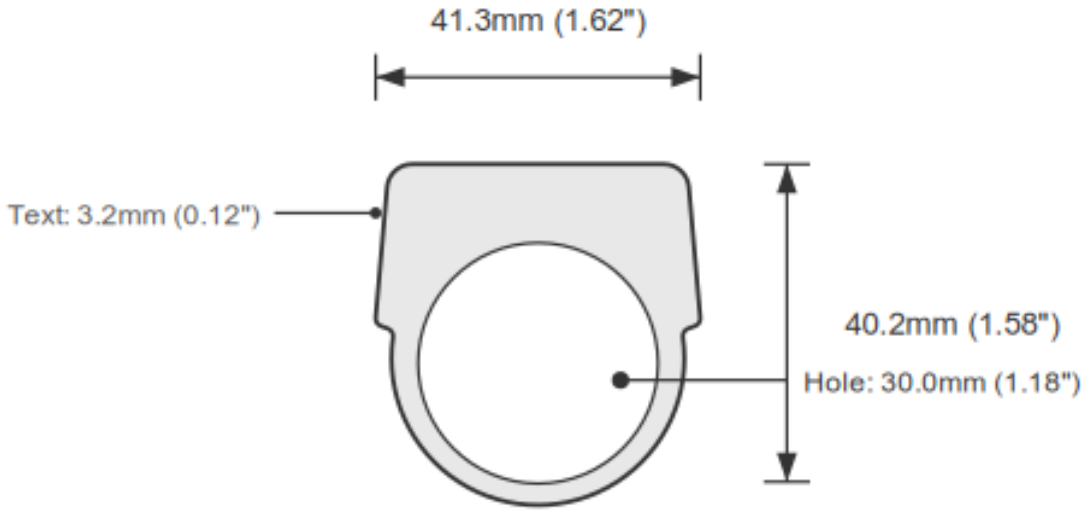

DIMENSIONS

Overall Width	38.8mm (1.53")
Overall Height	56.2mm (2.21")
Hole Diameter	30.0mm (1.18")
Text Size	3.2mm (0.12")

NOTES

1. All dimensions in millimeters unless otherwise noted
2. Drawing not to scale
3. See page 1 for manufacturing tolerances
4. Custom sizes available upon request

CARE, CLEANING & SHELF LIFE

- Cleaning: any household detergent with a soft cloth. Use ammonia- or alcohol-based cleaners sparingly with light pressure to avoid micro-scratches. No abrasives, rubbing compounds or scouring pads.
- Storage: flat, in a dry indoor area at steady room temperature, out of direct sunlight.
- Shelf life: the engraved plastic does not expire in storage. UV and outdoor ratings assume the top layer is not scratched through.
- Adhesive backing: apply within 24 months of manufacture for full bond strength. Apply to a clean, dry, oil-free surface, ideally at 70F or warmer (not below 50F), and press firmly. Bond reaches full strength in about 72 hours.