30mm Ring Tag - MOTOR 1, White on Black

SKU: TB-R-30-MOTOR-WOB
Category: Ring Tags
Color: White On Black
Device Size: 30mm

ENGRAVED TEXT

Line 1: "MOTOR"
Line 2: "1"

SPECIFICATIONS

Device Size	30mm
Tag Dimensions	38.8 x 56.2 mm
Hole Diameter	30mm
Material	2-Ply Laser Engraved Modified Acrylic
Engraving Depth	0.003" (0.076mm) - Depth may vary
Surface Finish	Matte
Thickness	0.0625" (1.6mm)
Cutting Method	Laser

TOLERANCES

Length: +/-0.12" | Width: +/-0.12" | Thickness: +/-5%

DURABILITY & ENVIRONMENT

- UV Tested: 3+ years without significant color change (ISO 4892-3)
- Suitable for outdoor use
- Temperature Range: -40F to 200F

SAFETY RATINGS

NFPA 704	HMIS
Health: 0 (Minimal)	Health: 0 (Minimal)
Flammability: 1 (Slight)	Flammability: 1 (Slight)
Reactivity: 0 (Minimal)	Physical Hazard: 0 (Minimal)

Transport: Not classified as dangerous goods

Product: 30mm Ring Tag - MOTOR 1, White on Black

SKU: TB-R-3

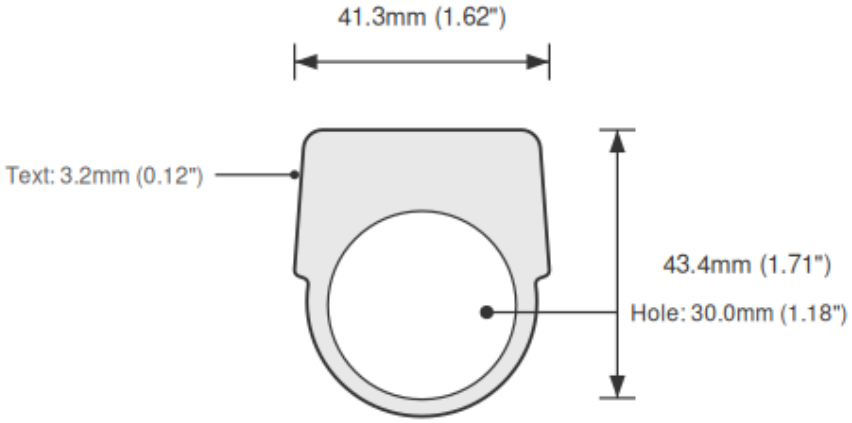

DIMENSIONS

Overall Width	38.8mm (1.53")
Overall Height	56.2mm (2.21")
Hole Diameter	30.0mm (1.18")
Text Size	3.2mm (0.12")

NOTES

1. All dimensions in millimeters unless otherwise noted
2. Drawing not to scale
3. See page 1 for manufacturing tolerances
4. Custom sizes available upon request