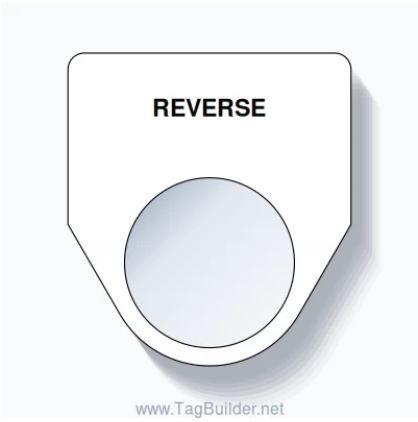

22mm Ring Tag - REVERSE, Single-Line Traditional, Black on White

SKU: TB-R22-REVERSE-TRAD1-STD-BLA
Category: Ring Tags
Color: Black On White
Device Size: 22mm

ENGRAVED TEXT

Line 1: "REVERSE"

SPECIFICATIONS

Device Size	22mm
Tag Dimensions	32.7 x 46.0 mm
Hole Diameter	22mm
Material	2-Ply Laser Engraved Modified Acrylic
Engraving Depth	0.003" (0.076mm) - Depth may vary
Surface Finish	Matte
Thickness	0.0625" (1.6mm)
Cutting Method	Laser

TOLERANCES

Length: +/-0.12" | Width: +/-0.12" | Thickness: +/-5%

DURABILITY & ENVIRONMENT

- UV Tested: 3+ years without significant color change (ISO 4892-3)
- Suitable for outdoor use
- Temperature Range: -40F to 200F

SAFETY RATINGS

NFPA 704	HMIS
Health: 0 (Minimal)	Health: 0 (Minimal)
Flammability: 1 (Slight)	Flammability: 1 (Slight)
Reactivity: 0 (Minimal)	Physical Hazard: 0 (Minimal)

Transport: Not classified as dangerous goods

Product: 22mm Ring Tag - REVERSE, Single-Line Traditional, Black on White

SKU: TB-R2

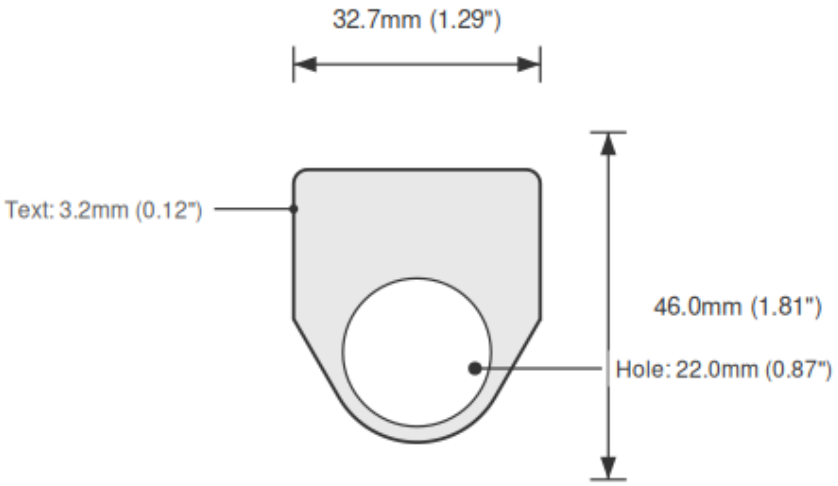

DIMENSIONS

Overall Width	32.7mm (1.29")
Overall Height	46.0mm (1.81")
Hole Diameter	22.0mm (0.87")
Text Size	3.2mm (0.12")

NOTES

1. All dimensions in millimeters unless otherwise noted
2. Drawing not to scale
3. See page 1 for manufacturing tolerances
4. Custom sizes available upon request