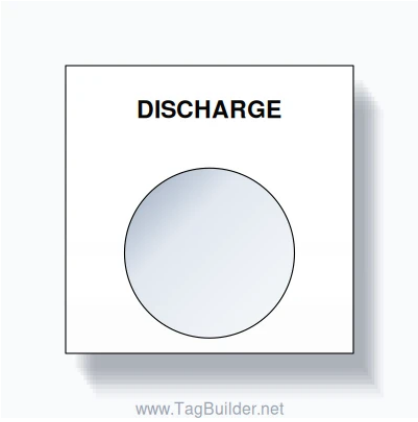


## 22mm Ring Tag - DISCHARGE, Single-Line Square, Black on White

SKU: TB-R22-DISCHARGE-ABSQ1-STD-BLA
Category: Ring Tags
Color: Black On White
Device Size: 22mm

### ENGRAVED TEXT

Line 1: "DISCHARGE"

### SPECIFICATIONS

| | |
|---|---|
| Device Size | 22mm |
| Tag Dimensions | 32.7 x 46.0 mm |
| Hole Diameter | 22mm |
| Material | 2-Ply Laser Engraved Modified Acrylic |
| Engraving Depth | 0.003" (0.076mm) - Depth may vary |
| Surface Finish | Matte |
| Thickness | 0.0625" (1.6mm) |
| Cutting Method | Laser |

### TOLERANCES

Length: +/-0.12" | Width: +/-0.12" | Thickness: +/-5%

### DURABILITY & ENVIRONMENT

- UV Tested: 3+ years without significant color change (ISO 4892-3)
- Suitable for outdoor use
- Temperature Range: -40F to 200F

### SAFETY RATINGS

| NFPA 704 | HMIS |
|---|---|
| Health: 0 (Minimal) | Health: 0 (Minimal) |
| Flammability: 1 (Slight) | Flammability: 1 (Slight) |
| Reactivity: 0 (Minimal) | Physical Hazard: 0 (Minimal) |

*Transport: Not classified as dangerous goods*

**Product: 22mm Ring Tag - DISCHARGE, Single-Line Square, Black on White**

SKU: TB-R2

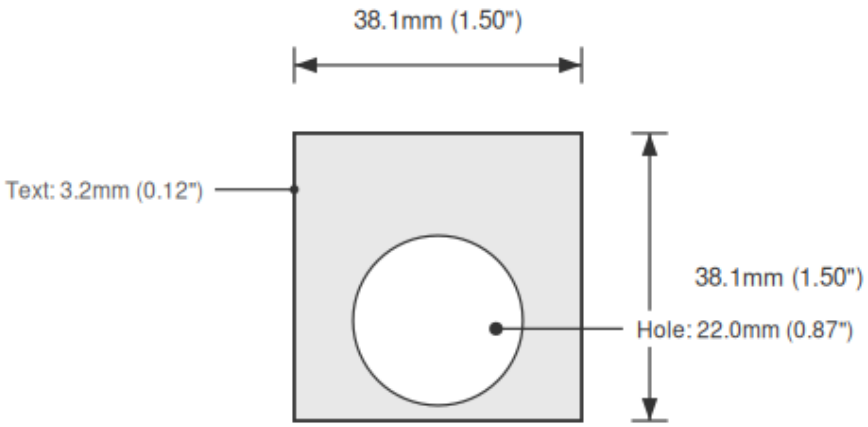


## DIMENSIONS

| | |
|---|---|
| Overall Width | 32.7mm (1.29") |
| Overall Height | 46.0mm (1.81") |
| Hole Diameter | 22.0mm (0.87") |
| Text Size | 3.2mm (0.12") |

## NOTES

1. All dimensions in millimeters unless otherwise noted
2. Drawing not to scale
3. See page 1 for manufacturing tolerances
4. Custom sizes available upon request